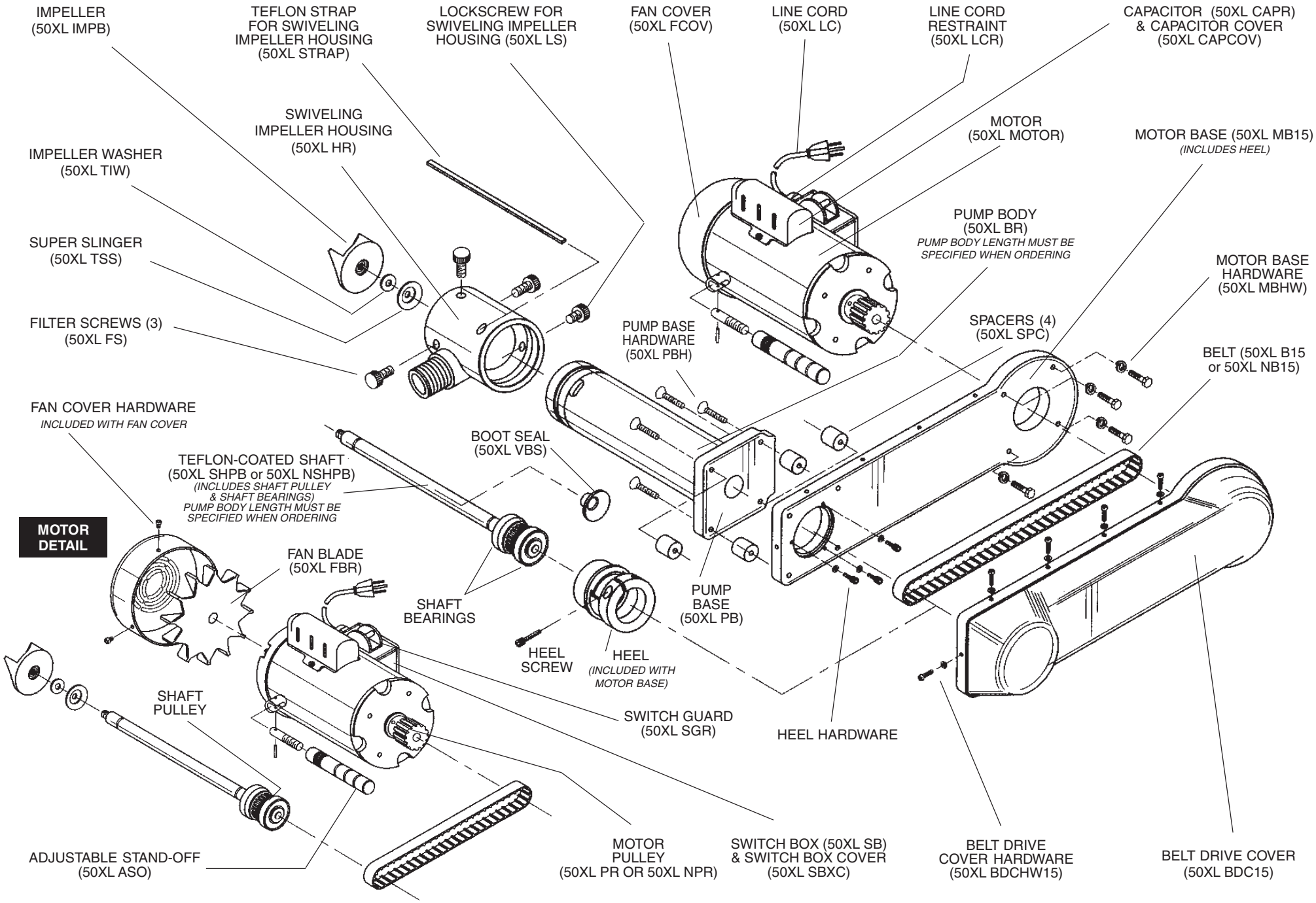FLO KING BXL5000 EXPLODED VIEW