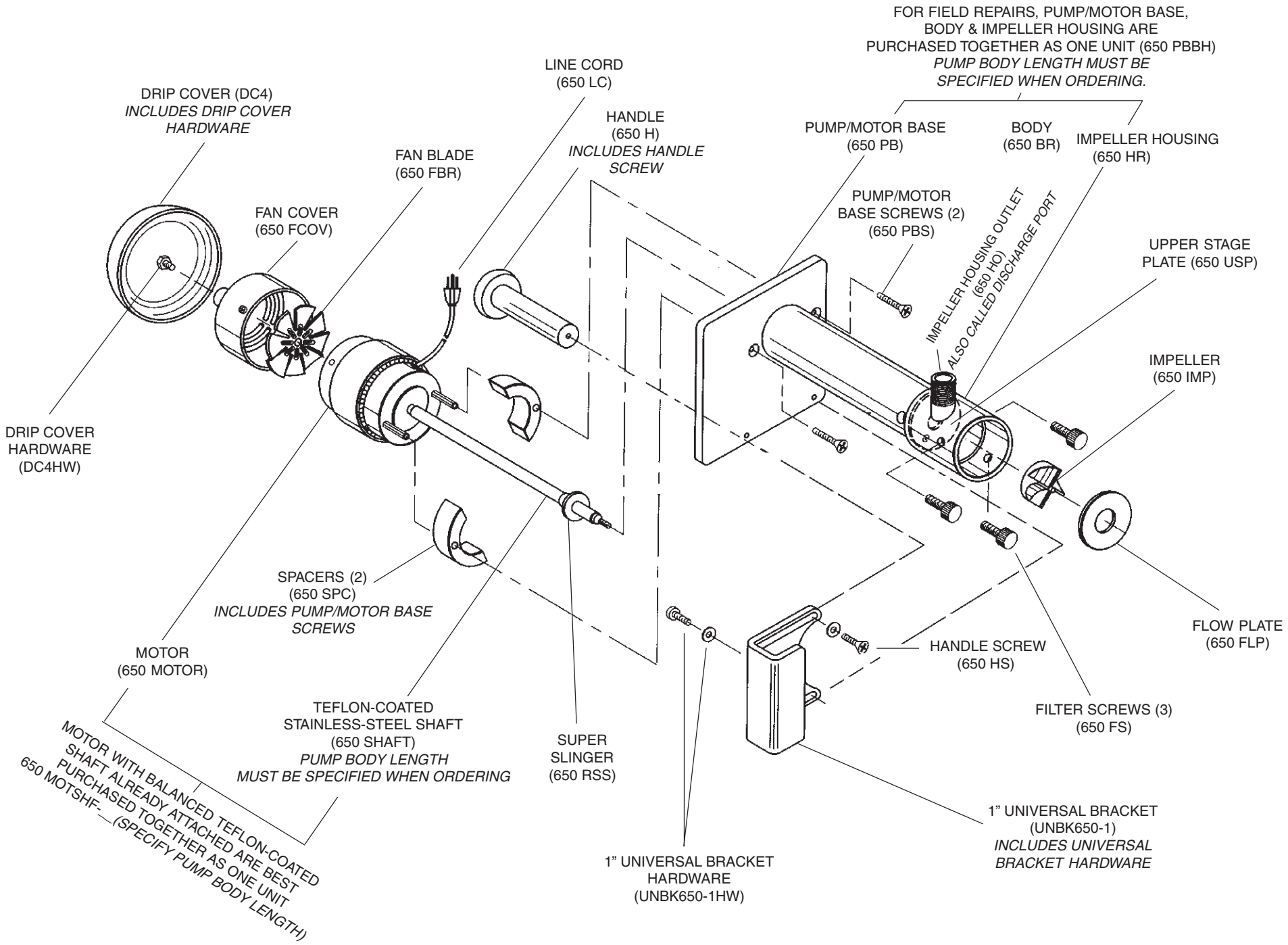FLO KING BX650 EXPLODED VIEW