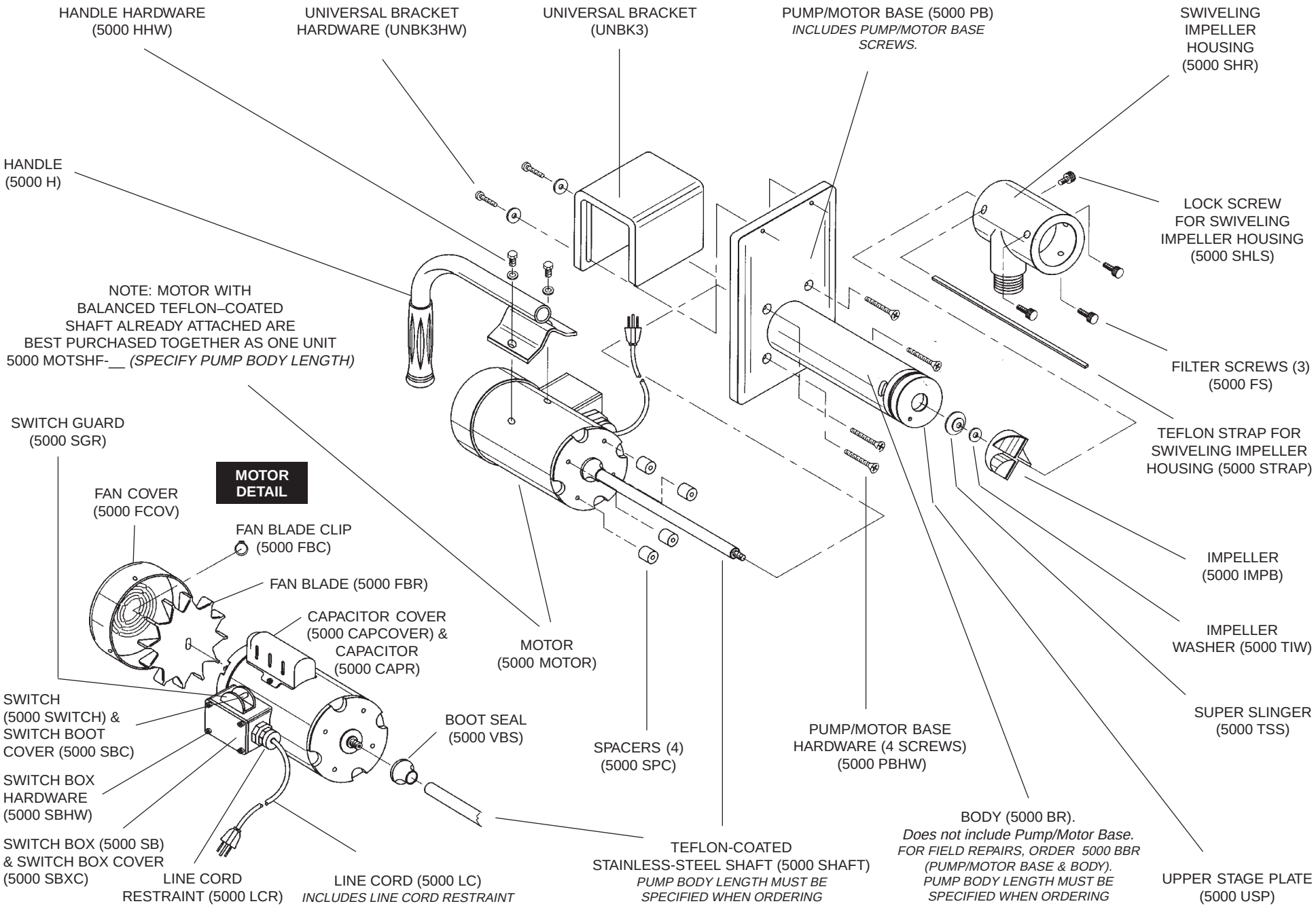FLO KING BX5000 EXPLODED VIEW