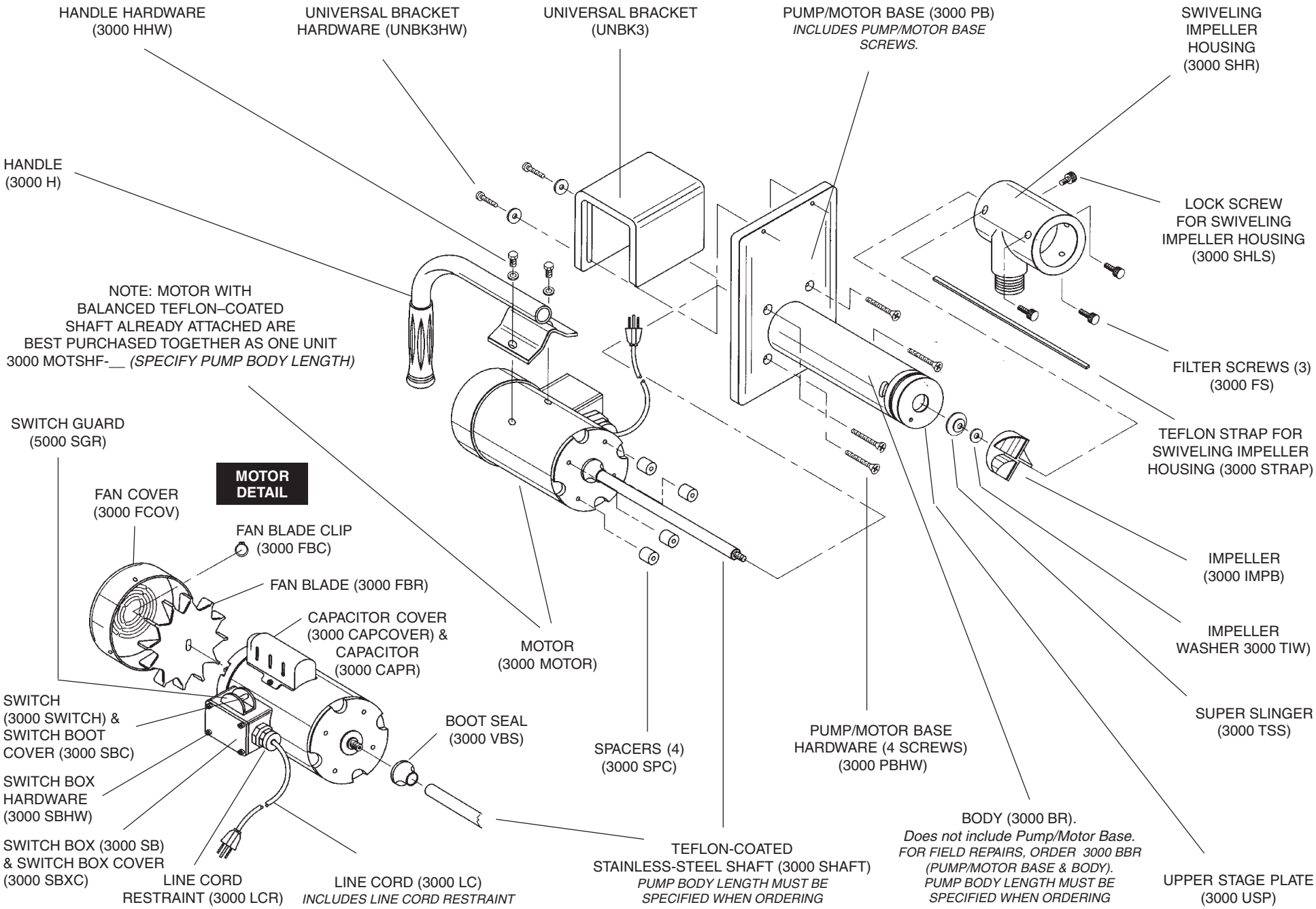FLO KING BX3000 EXPLODED VIEW